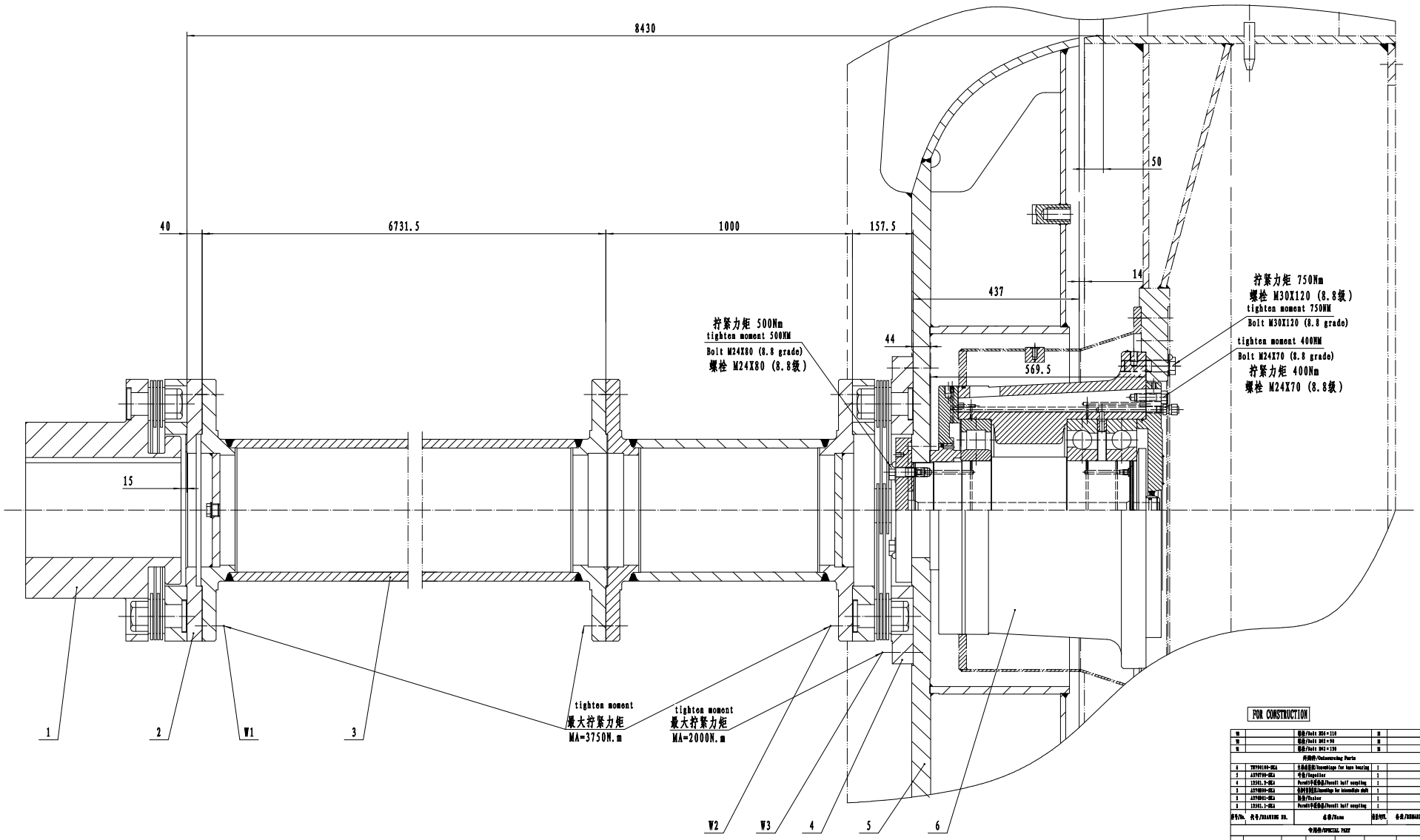

FOR CONSTRUCTION

11		螺栓/bolt M36×210	8	
10		螺栓/bolt M42×90	8	
9		螺栓/bolt M42×130	8	
外购件/Outsourcing Parts				
8	TB7904100-SEA	主轴承座组/bearings for turn bearing	1	
7	A370F09-SEA	气垫/Supplier	1	
6	13541.7-SEA	Pawel中间连轴/Pawel1 half coupling	1	
5	A370B06-SEA	中间轴轴承组/bearings for intermdiate shaft	1	
4	A370B01-SEA	制动器/Baker	1	
3	13541.1-SEA	Pawel中间连轴/Pawel1 half coupling	1	
序号/No.	代号/DRAWING NO.	名称/Name	材料/MTL.	备注/REMARK

今局件/SPECIAL PART

1	ISSUED FOR CONSTRUCTION	2006.12.				
NO.	DESCRIPTION	DATE	DRAWN BY	CHECKED BY	ENGINEER BY	APPROVED BY

POWER CORPORATION CORPORATION 1
THERMAL POWER PROJECT MANAGEMENT BOARD 3
POWER ENGINEERING CONSULTING JOINT STOCK COMPANY 3
THE CONSORTIUM OF CHINGDA-DOC-SHEPDI-ZEPC
CHENGDU POWER MACHINERY WORKS

PROJECT : DATUN HAI 3 THERMAL POWER PLANT PROJECT

CONTRACT NO: DES-0808E011

DRAWING NAME: ROTOR PART

PROJECT CODEAL NO: DES-3LEDC-M-PCD-0012

DRAWING NO : A370B06-SEA

REV: 0

MARK	NO.	SIGNATURE	DATE